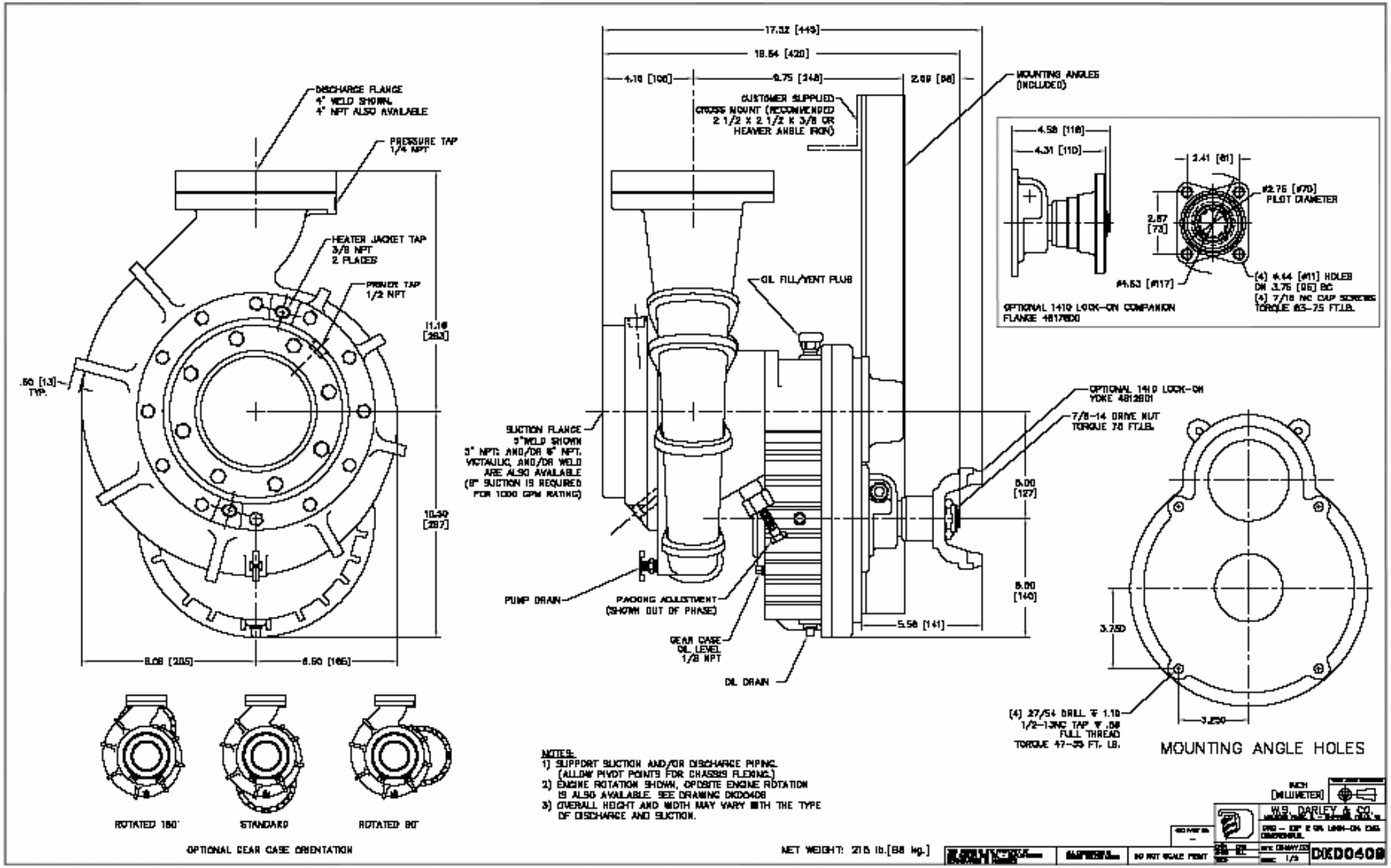
DISCHARGE FLANGE
4" WELD SHOWN
4" NPT ALSO AVAILABLE
PRESSURE TAP
1/4 NPT
HEATER JACKET TAP
3/8 NPT
2 PLACES
PRIMER TAP
1/2 NPT
11.18
[283]
10.39
[263]
.50 [13]
TYP.
8.08 [205]
6.50 [165]
17.32 [440]
16.54 [420]
4.18 [106]
6.75 [248]
2.69 [68]
CUSTOMER SUPPLIED
CROSS MOUNT (RECOMMENDED
2 1/2 X 2 1/2 X 3/8 OR
HEAVIER ANGLE IRON)
MOUNTING ANGLES
(INCLUDED)
OIL FILL/VENT PLUG
SUCTION FLANGE
3"WELD SHOWN
3" NPT; AND/OR 6" NPT,
VICTAULIC, AND/OR WELD
ARE ALSO AVAILABLE
(8" SUCTION IS REQUIRED
FOR 1000 GPM RATING)
PUMP DRAIN
PACKING ADJUSTMENT
(SHOWN OUT OF PHASE)
GEAR CASE
OIL LEVEL
1/8 NPT
OIL DRAIN
5.00
[127]
5.50 [140]
5.58 [141]
OPTIONAL 1410 LOCK-ON
YOKE 481280H
7/8-14 DRIVE NUT
TORQUE 70 FT.LB.
4.58 [116]
4.31 [110]
2.41 [61]
#2.76 [#70]
PILOT DIAMETER
2.87
[73]
#4.53 [#115]
(4) #.44 [#11] HOLES
ON 3.75 [95] BC
(4) 7/16 NC CAP SCREWS
TORQUE 65-75 FT.LB.
OPTIONAL 1410 LOCK-ON COMPANION
FLANGE 481780D
3.750
3.250
(4) 27/64 DRILL ↧ 1.10
1/2-13NC TAP ↧ .88
FULL THREAD
TORQUE 47-55 FT. LB.
MOUNTING ANGLE HOLES
ROTATED 180°
STANDARD
ROTATED 90°
OPTIONAL GEAR CASE ORIENTATION
NOTES:
1) SUPPORT SUCTION AND/OR DISCHARGE PIPING.
(ALLOW PIVOT POINTS FOR CHASSIS FLEXING.)
2) ENGINE ROTATION SHOWN, OPOSITE ENGINE ROTATION
IS ALSO AVAILABLE. SEE DRAWING DKD0408
3) OVERALL HEIGHT AND WIDTH MAY VARY WITH THE TYPE
OF DISCHARGE AND SUCTION.
NET WEIGHT: 215 lb.[98 kg.]
INCH
[MILLIMETER]
W.S. DARLEY & CO.
DKD0408